数字量输入/输出模块

*使用本品前，请仔细阅读使用说明书

Chinese Manuals

使用安全注意事项：

- 使用时注意不要超过额定电压，否则会造成破裂和烧损等不可预计的后果。
- 接线线缆请与高压线和动力线分开布线。
- 请严格按照接线图正确接线，以免造成安全事故。
- 本产品在易燃、易爆、易腐蚀环境下使用时，请配备相应的IP等级控制柜。
- 请不要私自拆机、修理、改造本产品。

类型和规格

类型和规格	UT-5100-16DIN	UT-5100-16DIP	UT-5100-08DIN	UT-5100-08DIP
通道数	16通道NPN数字量输入	16通道PNP数字量输入	8通道NPN数字量输入	8通道PNP数字量输入
功率	Max.70mA@5Vdc	Max.70mA@5Vdc	Max.50mA@5Vdc	Max.50mA@5Vdc
输入阻抗	>7.5kΩ	>7.5kΩ	>7.5kΩ	>7.5kΩ
开启电压范围	0~15Vdc	9~24Vdc	0~15Vdc	9~24Vdc
关闭电压范围	21~24Vdc	0~3Vdc	21~24Vdc	0~3Vdc
工作温度	-40~85℃	-40~85℃	-40~85℃	-40~85℃
工作环境湿度	5%-95%无冷凝	5%-95%无冷凝	5%-95%无冷凝	5%-95%无冷凝
防护等级	IP20	IP20	IP20	IP20

类型和规格

类型和规格	UT-5100-16DON	UT-5100-16DOP	UT-5100-08DON	UT-5100-08DOP
通道数	16通道NPN数字量输出	16通道PNP数字量输出	8通道NPN数字量输出	8通道PNP数字量输出
功率	Max.95mA@5Vdc	Max.75mA@5Vdc	Max.65mA@5Vdc	Max.55mA@5Vdc
输出阻抗	典型值0.4Ω	典型值0.4Ω	典型值0.4Ω	典型值0.4Ω
输出电流	单通道0.5A	单通道0.5A	单通道0.5A	单通道0.5A
工作温度	-40~85℃	-40~85℃	-40~85℃	-40~85℃
工作环境湿度	5%-95%无冷凝	5%-95%无冷凝	5%-95%无冷凝	5%-95%无冷凝
防护等级	IP20	IP20	IP20	IP20

类型和规格

类型和规格	UT-5100-8DOR			
通道数	8通道继电器输出			
功率	Max.270mA@5Vdc			
触点阻抗	≤100mΩ			
切换电流	Max.1A			
切换功率	Max.60W			
工作温度	-40~85℃			
工作环境湿度	5%-95%无冷凝			
防护等级	IP20			

安装注意事项

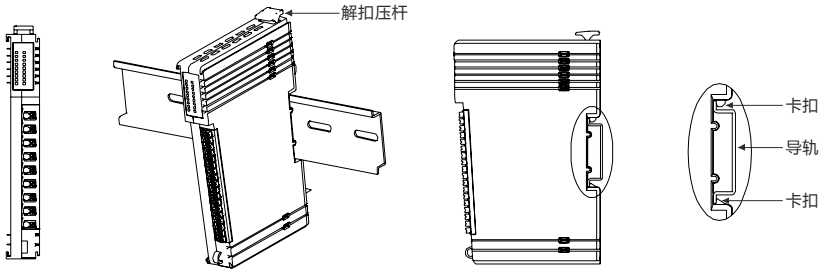

- 模块插入导轨，直到模块紧贴导轨
- 压紧卡口，确保卡扣完全压住导轨贴图

Digital input/output module

*Please read the instructions carefully before using this product

English Manuals

Notes:

- Not to exceed the rated voltage when using, otherwise it will cause unpredictable consequences such as rupture and burning.
- Route cables separately from high-voltage cables and power cables.
- Connect cables correctly according to the wiring diagram to avoid accidents.
- When this product is used in flammable, explosive and corrosive environment, please equip the corresponding IP level control cabinet.
- Please do not disassemble, repair or transform this product by yourself.

Specification

Spec	UT-5100-16DIN	UT-5100-16DIP	UT-5100-08DIN	UT-5100-08DIP
Channel	16-ch NPN digital input	16-ch PNP digital input	8-ch NPN digital input	8-ch PNP digital input
Power	Max.70mA@5Vdc	Max.70mA@5Vdc	Max.50mA@5Vdc	Max.50mA@5Vdc
Input impedance	>7.5kΩ	>7.5kΩ	>7.5kΩ	>7.5kΩ
Enable voltage range	0~15Vdc	9~24Vdc	0~15Vdc	9~24Vdc
Disable voltage range	21~24Vdc	0~3Vdc	21~24Vdc	0~3Vdc
Working temperature	-40~85℃	-40~85℃	-40~85℃	-40~85℃
Working humidity	5%-95% non-condensing	5%-95% non-condensing	5%-95% non-condensing	5%-95% non-condensing
Protection level	IP20	IP20	IP20	IP20

Specification

Spec	UT-5100-16DON	UT-5100-16DOP	UT-5100-08DON	UT-5100-08DOP
Channel	16-ch NPN digital output	16-ch PNP digital ouput	8-ch NPN digital output	8-ch PNP digital output
Power	Max.95mA@5Vdc	Max.75mA@5Vdc	Max.65mA@5Vdc	Max.55mA@5Vdc
Output impedance	Typical 0.4Ω	Typical 0.4Ω	Typical 0.4Ω	Typical 0.4Ω
Output current	Single channel 0.5A	Single channel0.5A	Single channel0.5A	Single channel0.5A
Working temperature	-40~85℃	-40~85℃	-40~85℃	-40~85℃
Working humidity	5%-95% non-condensing	5%-95% non-condensing	5%-95% non-condensing	5%-95% non-condensing
Protection level	IP20	IP20	IP20	IP20

Specification

Spec	UT-5100-8DOR			
Channel	8-ch relay output			
Power	Max.270mA@5Vdc			
Contact impedance	≤100mΩ			
Switch current	Max.1A			
Switch power	Max.60W			
Working temperature	-40~85℃			
Working humidity	5%-95% non-condensing			
Protection level	IP20			

Installation notes

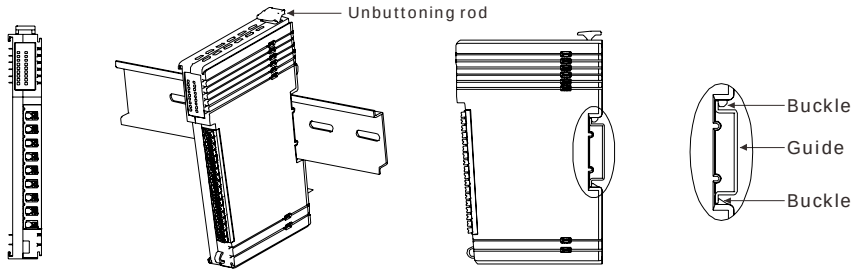

- Insert the module into the din rail until the module is close to it.
- Press the bayonet firmly to ensure that the buckle fully presses the din rail.

UT-5100-16DOP

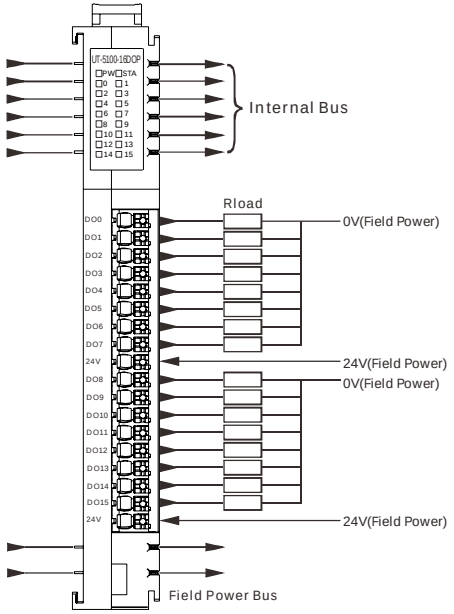

UT-5100-16DON

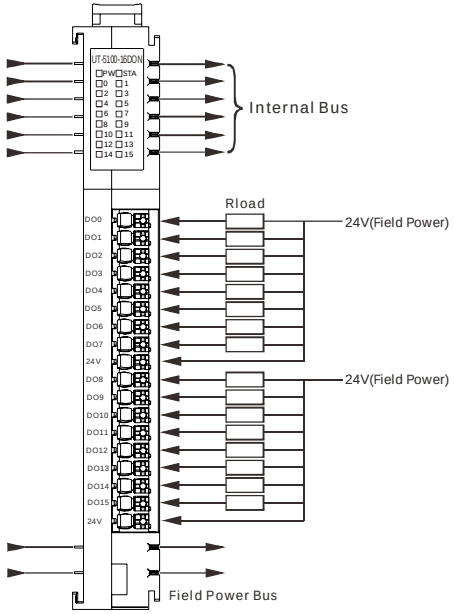

UT-5100-16DIN

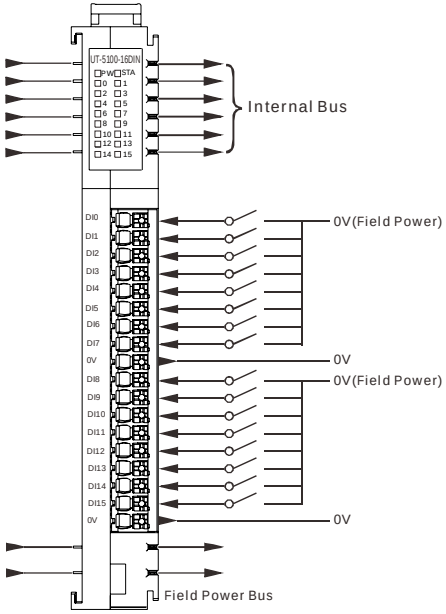

UT-5100-08DOP

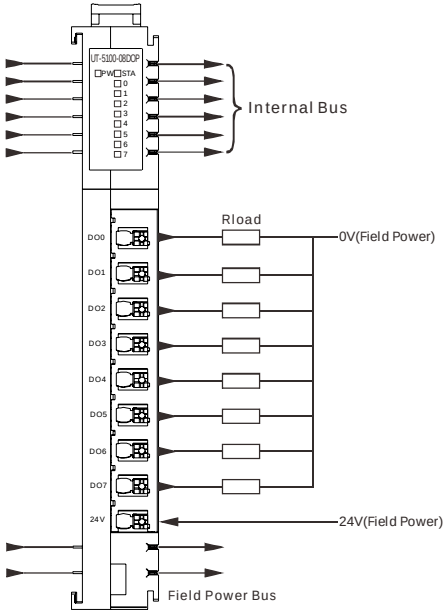

UT-5100-8DOR

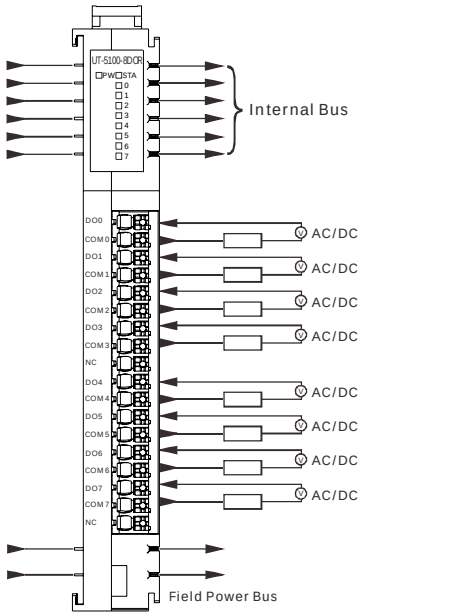

UT-5100-16DIP

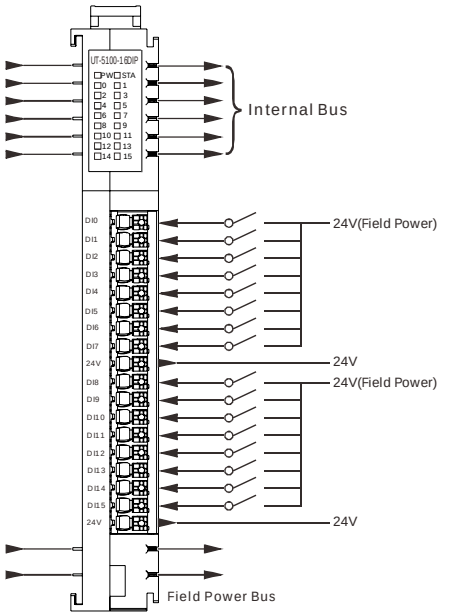

UT-5100-08DON

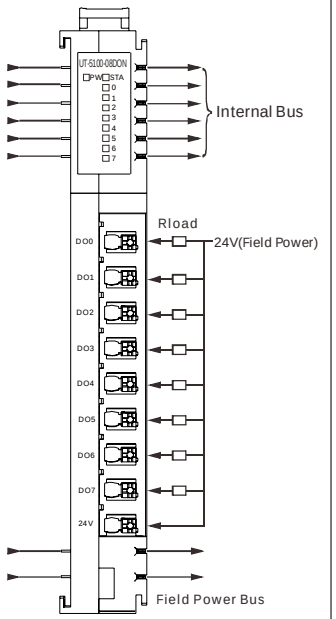

UT-5100-08DIP

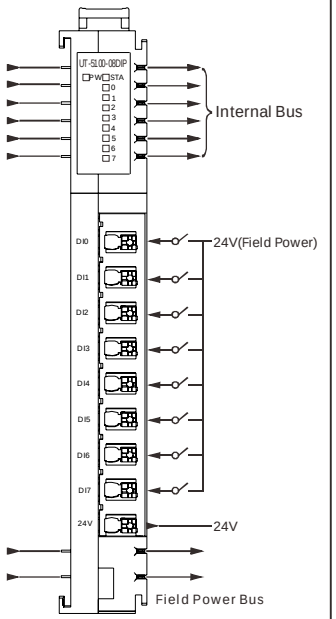
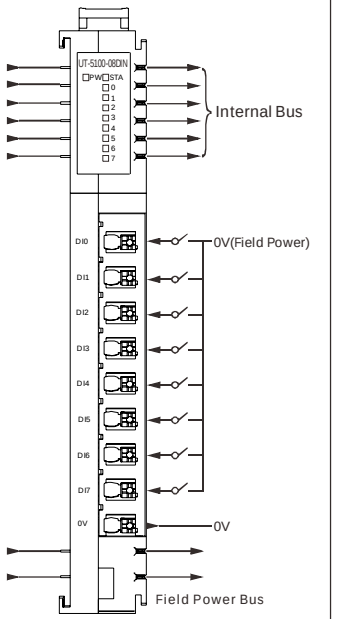
UT-5100-08DIN